NOTES:

1. 125 ✓ EXCEPT AS NOTED.
2. SPECIFICATION MIL-W-13855 APPLIES.
3. ALL EXTERIOR CORNERS AND EDGES SHALL BE BROKEN .003 TO .015 UNLESS OTHERWISE SPECIFIED.
4. MATERIAL: STEEL ALLOY MIL-S-5000, TYPE 4340.
5. HEAT TREATMENT: MIL-H-6875, QUENCH AND TEMPER TO HARDNESS SPECIFIED.
6. FINAL PROTECTIVE FINISH: FINISH 5.3.1.2 OF MIL-STD-171.
7. INSTALL INSERTS IN ACCORDANCE WITH MS33557 REMOVE NOTCHED TANG AFTER INSTALLATION.
8. LOCALLY HARDEN INDICATED SURFACE, TEMPER AT 375°F TO 400°F TO ROCKWELL C50 TO 55 FOR DEPTH OF .02 MIN ON FINISHED PART. SEE SHEET 2 ZONE E4.
9. BREAK EDGES WITH .03+.02R, 12 PLACES WHERE SHOWN.
10. LOCALLY HARDEN SURFACE INDICATED, TEMPER AT 375°F TO 400°F TO ROCKWELL C45 TO 55. SEE SHEET 1 ZONE G2
11. PART MUST HAVE MAGNETIC PARTICLE INSPECTION PER MIL-I-6868.
12. CONTINUANCE OF .015 + .010 CHAMFER WITH BUFFED AND POLISHED CORNERS MAY BE USED AS ALTERNATIVE METHOD.
13. ALL CAM DATA IS BASIC. A MAXIMUM PERMISSIBLE STEP BETWEEN STATIONS SHALL NOT EXCEED .001 ON CAM DEVELOPMENT. SEE SHEET 1 ZONE F4.
14. .189 + .003 DIMENSION APPLIES BETWEEN THE 3.15 DIA + .02 AND THE 3.71 DIA + .02. OPTIONAL UNDERCUT ON BALANCE OF SURFACE TO BE FLUSH TO .01 BELOW AS SHOWN. SEE SHEET 2 ZONE E3.

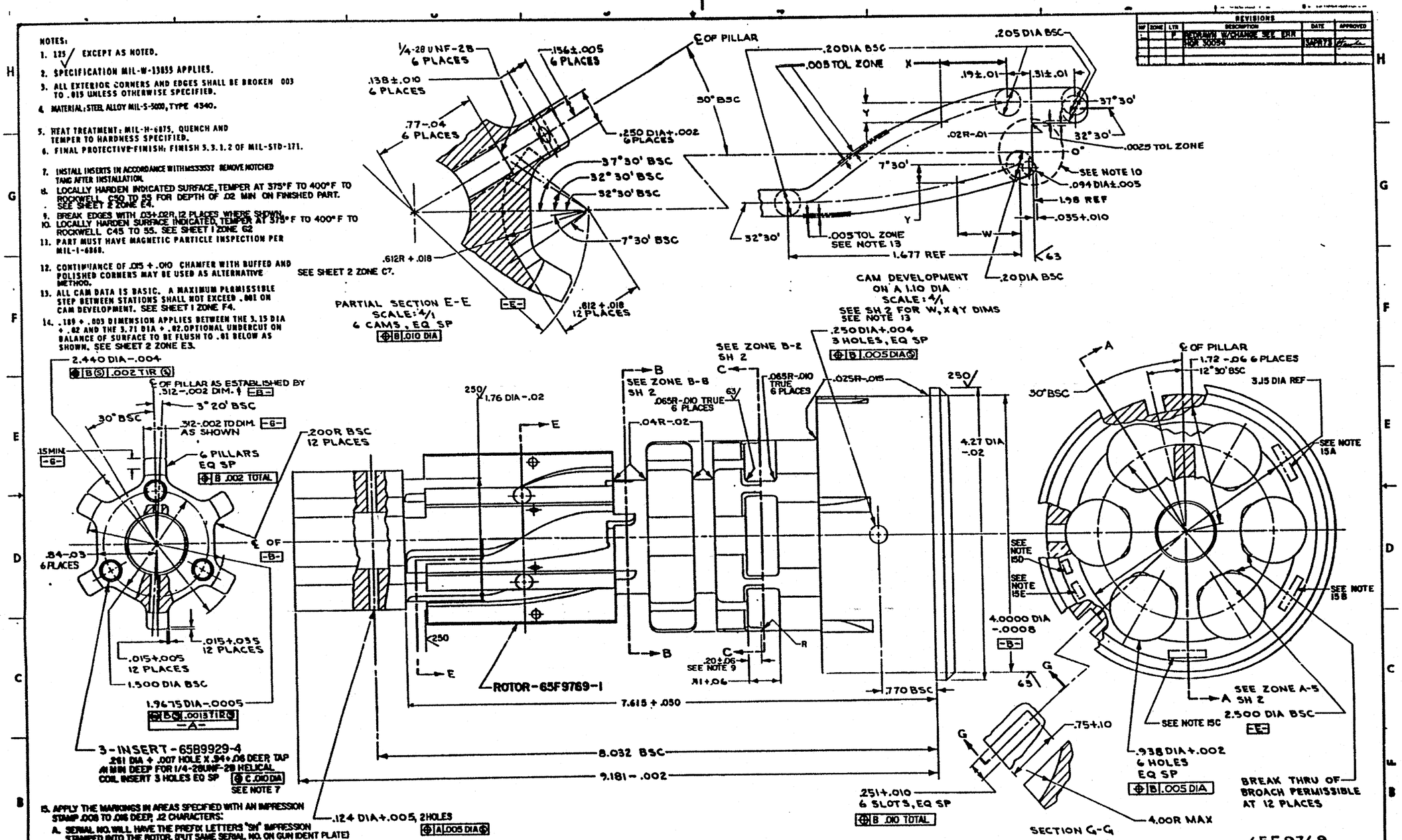

15. APPLY THE MARKINGS IN AREAS SPECIFIED WITH AN IMPRESSION STAMP .008 TO .016 DEEP, .12 CHARACTERS:
    A. SERIAL NO. WILL HAVE THE PREFIX LETTERS "SN" IMPRESSION STAMPED INTO THE ROTOR. (PUT SAME SERIAL NO. ON GUN IDENT PLATE)
    B. MANUFACTURERS IDENTIFICATION
    C. PART NO. "65F9769".
    D. PROOF MARK "P" AFTER PROOF FIRING GUN.
    E. M.P.I. MARK "M" AFTER SUCCESSFUL MAGNETIC PARTICLE INSPECTION.
    THE BARREL LOCKING GROOVE (REF .189+.003 DIM SH 2, ZONE E3) SHALL BE PROPERLY SUPPORTED DURING STAMPING TO PREVENT ITS DISTORTION
16. MAXIMUM STEP

FOR LIST OF PARTS SEE ENGINEERING PARTS LIST 65F9769

PART NO 65F9769

REVISIONS					
INF	ZONE	LTR	DESCRIPTION	DATE	APPROVED
		F	REVISION WORKING SEE ECN FOR 30054	SAPR72	

MECHANICAL PROPERTIES		
YP		
YS		
EL %		
RA		
BH		7.62MM GUN
RN	C30-35	65D977O / 6AU 29/A
SEE NOTES 8 & 10		NEXT ASSY / USED ON
		APPLY PART NO. PER MIL-STD-130

UNLESS OTHERWISE SPECIFIED DIMENSIONS ARE IN INCHES
TOLERANCES ON DECIMALS .XX ± .XXX ± ANGLES ± MATERIAL SEE NOTE 4
HEAT TREATMENT SEE NOTE 5
FINAL PROTECTIVE FINISH SEE NOTE 6

ORIGINAL DATE OF DRAWING 16 APR 65
SUPVSD
DRAWN
DESIGN
SUBMITTED
APPROVED

DEPT OF THE ARMY
ROCK ISLAND ARSENAL, ROCK ISLAND, ILL. 61201

ROTOR, GUN

SIZE F | CODE IDENT NO. 19204 | 65F 9769

SCALE 2/1 | UNIT WT | SHEET 1 OF 2